INFINITIGROUP

A Better Way

PT. Citra Langgeng Sentosa

Kawasan Industri Jababeka Phase III
JL. Tekno 1, Blok B1-K
Cikarang, Bekasi 17530
TEL : (62-21) 89840277
FAX : (62-21) 89840278
E-MAIL : salesadmin@citralanggeng.com

Tangerang Branch

Bizpoint Blok E 56 Sukamulya,
Cikupa, Tangerang 15710,
TEL : (62-21) 22596784
E-MAIL : salesadmin@citralanggeng.com

PT. Iniled Indonesia Industri

Kawasan Industri Jababeka Phase V
JL. Science Boulevard Blok A2-16,
Cikarang Bekasi 17530
TEL : (62-21) 29574687
FAX : (62-21) 29574688
E-MAIL : sales@iniled.co.id

PT. Mitsu Sinar Teknik

JL. Raya Setu-Cibarusah
Kp. Rawa Atug No. 76
RT/002/06, Setu, Cimuning, Mustika Jaya Bekasi
TEL : +62 8510 2580399
Fax :+62 21 8243 4984

PT. Artifa Sukses Persada

SOHO Pancoran
JL. Let Jend. MT. Haryono Kav.2-3,
South Wing Lt 12 No.10
Pancoran, Jakarta Selatan 12810
TEL : (62-21) 8062 5868
E-MAIL : nidya@iniled.co.id

PT. Infiniti Nuansa Internasional

Kawasan Industri Tunas 2, Blok 6C
Batam Centre, Batam-Kepulauan Riau,
Indonesia 29462
TEL : (62-778) 8073065
FAX : (62-778) 8073064
E-MAIL : batam.sales@infiniti.co.id

Innogreen Solution Pte Ltd

5 Yishun Industrial Street 1,
#02-02 North Spring Bizhub
Singapore 768161
Tel: +65 6352 3313
Fax: +65 6352 0280
EMAIL : sales@innogreen.com.sg
WEBSITE : http://www.innogreen.com.sg

Hotline
0815-8730000

INFINITIROBOTIC

A Better Way, Infiniti Unmanned Technology

AGV

KARAKURI

AUTOMATION

ARM ROBOT

I-PICKING

Content

Overviews 01
1-Way Tunnel Type AGV 02
2-Way Tunnel Type AGV 03
2-Way 4Direction AGV 04
2-Way Super Long AGV 05
L-Type AGV 06
SMT AGV 07
Heavy Duty Lifting AGV 08
Omni Lifting AGV 09
Fork AGV Laser Guide 10
Forklift AGV Laser Guide 11
AGV Intelligent Management System for Laser & QR/IMU Guidance 12-13
CLARK AGV 14
Omni CLARK AGV 15
Auto Charging, Andon Charging, Induction Chaging 16
Safety System 17
Traffic Control System, Central Control System 18
Call System, Dispatch System 19
Automation 20
Lean Manufacture 21
Collaborative 22~23~24
6 Axis Arm Robot 25
i-Picking 26~27~28~29

What we are ?

Infiniti Robotics is robotics and automation solutions for industrial needs with a very broad application from automobile, electronics, garments to consumer goods industry.

1. AGV (Automated Guided Vehicle)

To improve material handling and production logistics, our AGV will increase production efficiency and save production cost by replacing manual handling and porting. With 3 different types of guidance such as magnetic tape, Inertial Navigation System, and Laser Guidance. We also provide AGV for outdoor application.

2. Arm Robots

Palletizing and picking up things has never been easier with our Arm robots. Our Arm Robots come with the various specification, including 4 and 6 axis variant with high precision and accuracy for repeatable motions. For stamping and forging, we also provide linear robots.

3. I-Picking

This is a Put To Light (PTL) systems which use light displays to direct operators to specific stock location. To reduce errors produced by miscounting or picking materials and improving efficiency with simplifying displays to reduce total cost and time.

Why choose us?

Our goal is to make industrial process more effective, safer and precise, and to obtain the highest level of services and efficiency for customer benefits. We are providing solutions for your robotics and automation solution with 5 added values for our services and products :

HIGH-QUALITY PRODUCT
INTELLECTUAL PROPERTY RIGHT
CUSTOMISED TECHNICAL SOLUTION
PROFESSIONAL TECHNICAL SUPPORT

Service

We provide TECHNICAL CONSULTATION & TRAINING for free. Our team is highly capable of solving all your robotics and automation problems with no doubt.

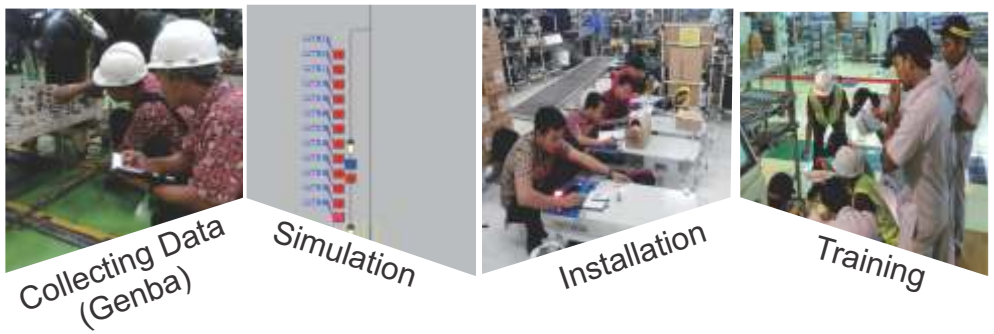

1-Way Tunnel Type AGV

QFG1400V3-EEEE-F/QFG1100V2-EEEE-F

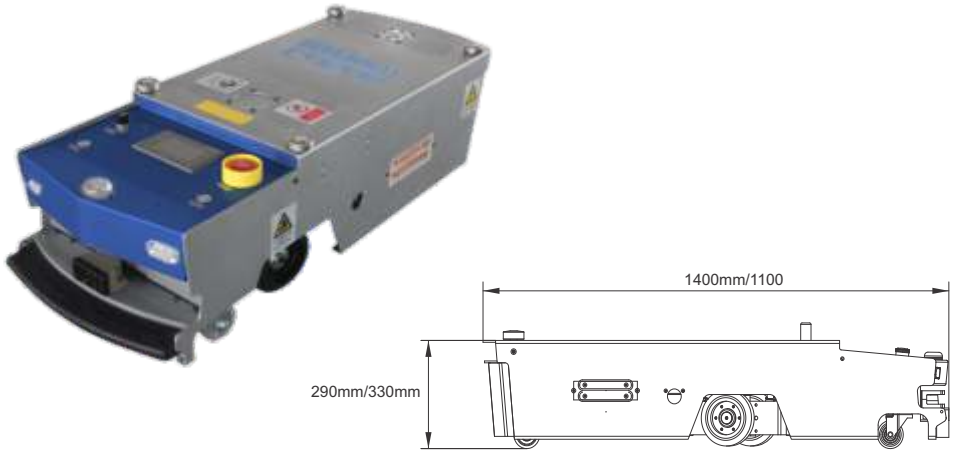

Dimensions	L1400mm x W420mm x 290mm	L1100mm x W420mm x H330mm
Drive Mode	Dual-wheel Differential Speed, four wheel support	
Motor Driver	200W 2pcs, Brushless Motor DC 2500rpm	100W 2pcs, Brushless Motor DC 2500rpm
Controller	Omron PLC, Data Collecting PCB, Wireless	
Load Capacity	1000Kg	300Kg/500Kg
Running Direction	Forward, Left & right	
Accuracy	±10mm	
Guide Methode	Magnetic tape North Pole, H 1.2mm W 50mm	
Display Setting	HMI 4.3 Inch	
Running Speed	Variation Speed : 5m/min - 45m/min	
Climbing Capacity	3-5 degree	
Turning Radius	≥500	
Safety	Obstacle sensor, Anti-collision bumper	
Obstacle Sensor	Panasonic , SICK, IR	
Alarm Mode	Sound and light	
Battery	• 24V 60Ah Lithium • 24V 75Ah Lead Acid	
Charge mode	• Auto Charging • Manual Charging	
Command Method	RFID Card	
Route Memory	255 data	
Work time	8 hours	
Lifetime	>10 years	

2-Way Tunnel Type AGV

QFS1550V3-EEEE-F

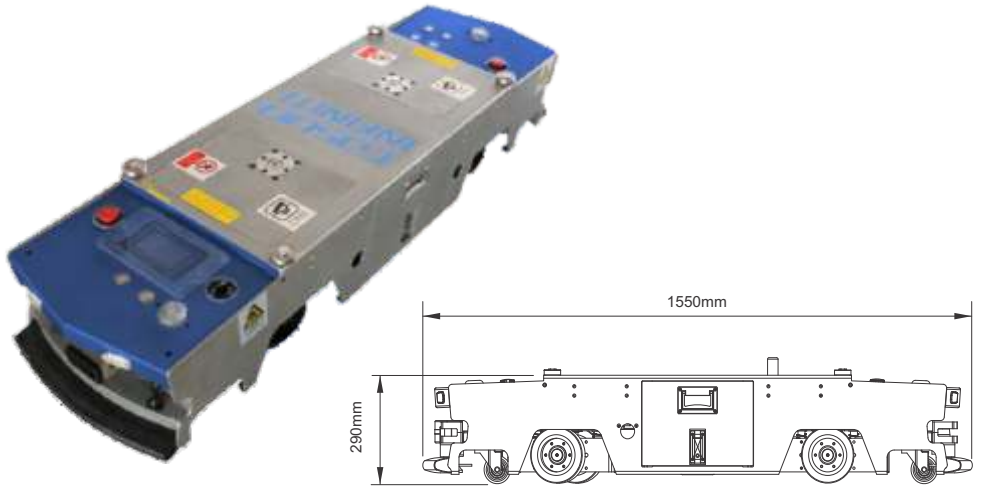

Dimensions	L1550mm x W420mm x H290mm
Drive Mode	Four-wheel Differential Speed, four wheel support
Motor Driver	100W 4pcs, Brushless Motor DC 2500rpm
Controller	Omron PLC, Data Collecting PCB, wireless
Load Capacity	300Kg/500Kg/1000Kg
Running Direction	Forward, Backward, Left & right
Accuracy	±10mm
Guide Methode	Magnetic tape North Pole, H 1.2mm W 50mm
Display Setting	HMI 4.3 Inch
Running Speed	Variation Speed : 5m/min - 45m/min
Climbing Capacity	3-5 degree
Turning Radius	≥500mm
Safety	Obstacle sensor, Anti-collision bumper
Obstacle Sensor	Panasonic , SICK, IR
Alarm Mode	Sound and light
Battery	• 24V 60Ah Lithium • 24V 75Ah Lead Acid
Charge mode	• Auto Charging • Manual Charging
Command Method	RFID Card
Route Memory	255 data
Work time	8 hours
Lifetime	>10 years

2-Way 4 Direction AGV

QFS1550V2-8683021554037

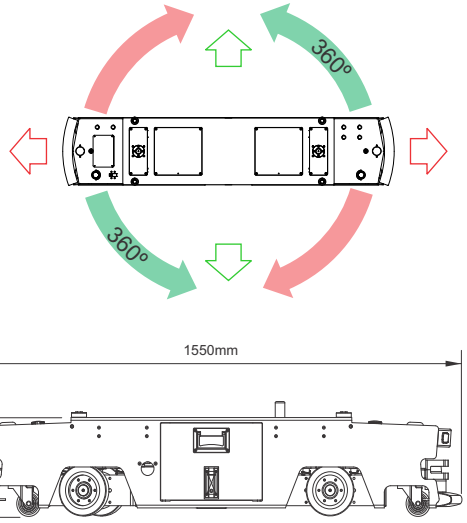

Dimensions	L1550mm x W424mm x H290mm	
Drive Mode	Four-wheel Differential Speed, four wheel support	
Motor Driver	100W 4pcs, Brushless Motor DC 2500rpm	
Controller	Mod bus controller, Data Collecting PCB, wireless	
Load Capacity	300Kg/500Kg/1000Kg	300Kg/500Kg
Running Direction	Forward, Backward, Left & right	
Accuracy	±10mm	
Guide Methode	Magnetic tape North Pole, H 1.2mm W 50mm	
Display Setting	HMI 4.3 Inch	
Running Speed	Variation Speed : 5m/min - 45m/min	
Climbing Capacity	3-5 degree	
Turning Radius	≥500mm	
Safety	Obstacle sensor, Anti-collision bumper	
Obstacle Sensor	Panasonic , SICK, IR	
Alarm Mode	Sound and light	
Battery	• 24V 60Ah Lithium • 24V 75Ah Lead Acid	
Charge mode	• Auto Charging • Manual Charging	
Command Method	RFID Card	
Route Memory	255 data	
Work time	8 hours	
Lifetime	>10 years	

2-Way Super Long AGV

QFS2100V2-300C-8683052130000

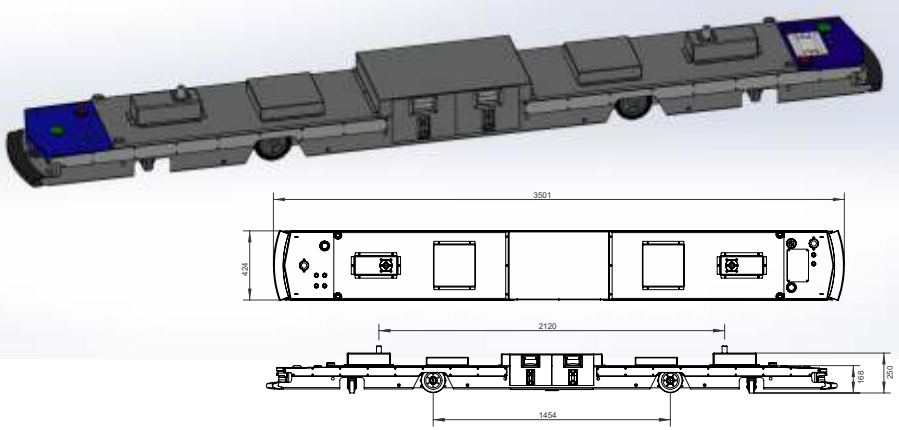

Dimensions	L3500mm x W420mm x H250mm
Drive Mode	Four-wheel Differential Speed, four wheel support
Motor Driver	100W 4pcs, Brushless Motor DC 2500rpm
Controller	Omron PLC, Data Collecting PCB, wireless
Load Capacity	300Kg/500Kg/1000Kg
Running Direction	Forward, Backward, Left & right
Accuracy	±10mm
Guide Methode	Magnetic tape North Pole, H 1.2mm W 50mm
Display Setting	HMI 4.3 Inch
Running Speed	Variation Speed : 5m/min - 45m/min
Climbing Capacity	3-5 degree
Turning Radius	≥1800mm
Safety	Obstacle sensor, Anti-collision bumper
Obstacle Sensor	Panasonic , SICK, IR
Alarm Mode	Sound and light
Battery	24V 65Ah Lead Acid
Charge mode	• Auto Charging • Manual Charging
Command Method	RFID Card
Route Memory	255 data
Work time	8 hours
Lifetime	>10 years

L-Type AGV

QYG1257V3-EEEE-F

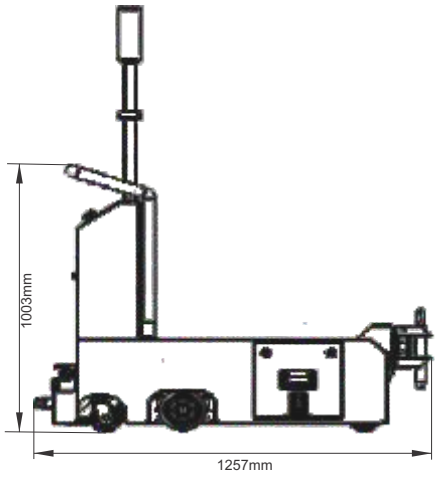

Dimensions	L1250mm x W450mm x H890mm
Drive Mode	Four-wheel Differential Speed, four wheel support
Motor Driver	2x100W Oriental Differential motor 2x200W
Controller	Omron PLC, Data Collecting PCB, wireless
Load Capacity	300Kg/500Kg/1000Kg
Running Direction	Forward, Left & right
Accuracy	±10mm
Guide Methode	Magnetic tape North Pole, H 1.2mm W 50mm
Display Setting	HMI 4.3 Inch
Running Speed	Variation Speed : 5m/min - 45m/min
Climbing Capacity	3-5 degree
Turning Radius	≥500mm
Safety	Obstacle sensor, Anti-collision bumper
Obstacle Sensor	Panasonic , SICK, IR
Alarm Mode	Sound and light
Battery	24V 75Ah Lead Acid
Charge mode	• Auto Charging • Manual Charging
Command Method	RFID Card
Route Memory	255 data
Work time	8 hours
Lifetime	>10 years

SMT AGV

X4073A-SMT

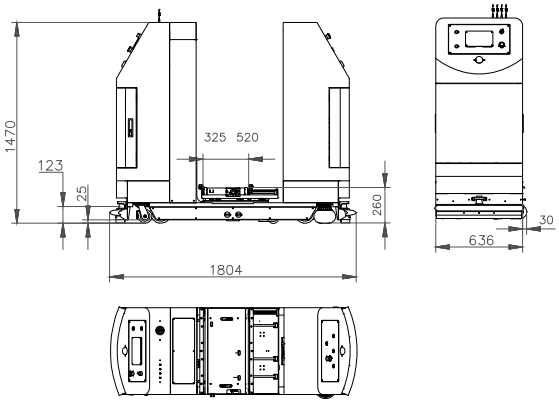

Dimensions	L1800mmxW640mmXH1400mm
Drive Mode	Four-wheel Differential Speed, four wheel support
Motor Driver	Oriental Motor 2x100W
Controller	Omron PLC, Data Collecting PCB, wireless
Load Capacity	50 Kg
Driving Direction	Forward, Backward, Left/Right
Accuracy	±10mm
Guide Methode	Magnetic tape North Pole, H 1.2mm W 50mm
Display Setting	HMI 4.3 Inch
Running Speed	0-45 m/min (adjustable)
Climbing Capacity	5 degree
Turning Radius	≥1000mm
Safety	Obstacle sensor, Anti-collision bumper
Obstacle Sensor	SICK
Alarm Mode	Sound and light
Battery	24V 60Ah Lead Acid
Charge mode	• Auto Charging • Manual Charging
Command Method	RFID Card
Route Memory	255 data
Work time	8 hours
Lifetime	>10 years

Heavy Duty Lifting AGV

QFS1550V2-8683021553866

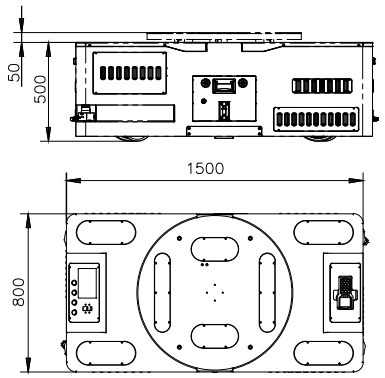

Dimensions	L1550mm x W800mm x H500mm
Drive Mode	Four-wheel Differential Speed, four wheel support
Motor Driver	Steering wheel 2x1000W
Controller	Omron PLC, Data Collecting PCB, wireless
Load Capacity	1500 Kg
Driving Direction	Forward, Backward, Rotation
Accuracy	±10mm
Guide Methode	Magnetic tape North Pole, H 1.2mm W 50mm/QR Code + imu
Display Setting	HMI 4.3 Inch
Running Speed	0-45 m/min (adjustable)
Climbing Capacity	5 degree
Turning Radius	≥700mm
Safety	Obstacle sensor, Anti-collision bumper
Obstacle Sensor	SICK
Alarm Mode	Sound and light
Battery	24V 75Ah Lead Acid
Charge mode	• Auto Charging • Manual Charging
Command Method	RFID Card
Route Memory	255 data
Work time	8 hours
Lifetime	>10 years

Omni Lifting AGV

BFJ850-320V2

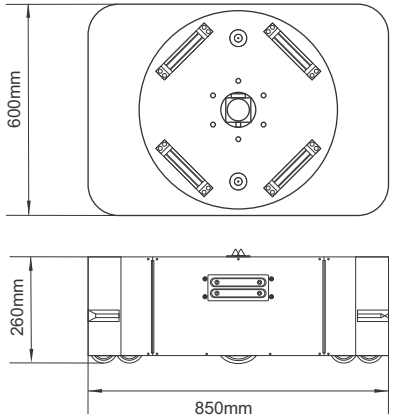

Dimensions	L850mm x W600mm x H260mm
Drive Mode	2 Wheel drive servo motor
Motor Driver	Oriental motor 2x400W
Controller	Omron PLC, Data Collecting PCB, wireless
Load Capacity	300kg/500kg
Driving Direction	Forward, Backward, Rotation
Accuracy	±10mm
Guide Methode	QR Code + imu
Display Setting	HMI 4.3 Inch
Running Speed	0-90 m/min (adjustable)
Climbing Capacity	3 degree
Turning Radius	≥1000mm
Safety	SICK Obstacle sensor
Obstacle Sensor	SICK
Alarm Mode	Sound and light
Battery	Lithium 48V 26Ah
Charge mode	• Auto Charging • Manual Charging
Work time	24 hours
Lifetime	>10 years

Fork AGV Laser Guide

CJ2200V3-EEEE-F

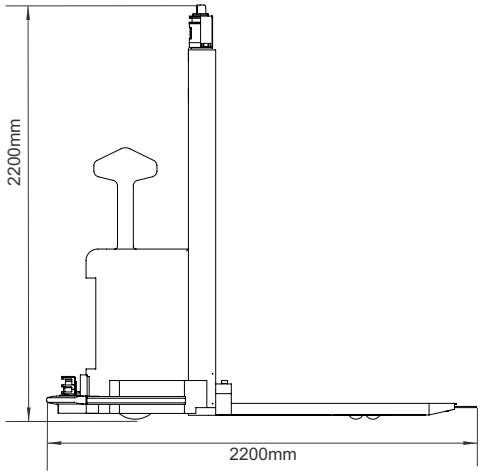

Dimensions	L 2200mm x W800mm x H2200mm
Drive Mode	Steering Wheel Driving
Motor Driver	1300 W 1pcs, Brushless Motor DC
Controller	MCU, Data Collecting PCB, Wireless and Manual
Load Capacity	1500Kg/2000Kg
Running Direction	Forward, Backward, Left & Right
Accuracy	±20mm
Guide Methode	Laser Guidance
Display Setting	HMI 4.3 Inch
Running Speed	Variation Speed : 5m/min - 45m/min
Capacity	3-5 degree
Turning Radius	≥2000 mm
Safety	Obstacle sensor, Anti-collision bumper, Anti-collision Switch
Obstacle Sensor	Panasonic, SICK
Alarm Mode	Sound and light
Battery	28V 200Ah Lithium
Charge mode	Auto Charging
Command Method	RFID Card
Route Memory	255 data
Work time	8 hours
Lifetime	>10 years

Forklift AGV Laser Guide

CJ PT20V2

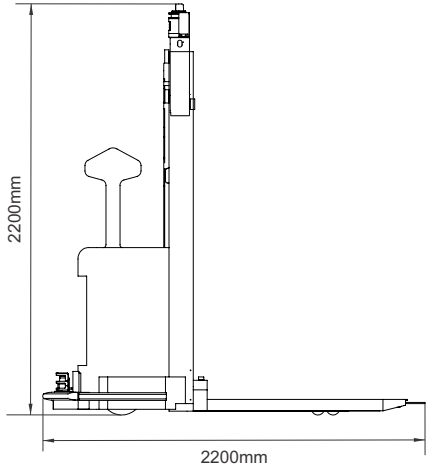

Dimensions	L2200mmXW800mmX2200
Drive Mode	Steering Wheel Driving
Controller	MCU, Data Collecting PCB, Wireless and Manual
Load Capacity	1500Kg (Above 2.3m, 500Kg)
Running Direction	Forward, Backward, Left & Right, Slide
Accuracy	±10mm
Adjustable Emergency Brake Distance	≤20mm
Lifting Height	0m ~ 2.9m
Guide Methode	Laser Guidance
Display Setting	HMI 4.3 Inch
Running Speed	Variation Speed : 5m/min - 35m/min
Capacity	Max 3 degree
Turning Radius	≥1705 mm
Safety	Obstacle sensor, Anti-collision bumper, Anti-collision Switch
Obstacle Sensor	SICK
Alarm Mode	Sound and light
Battery	28V 200Ah Lithium
Charge mode	Auto Charging
Work time	8 hours
Lifetime	>10 years

Product Feature:

1. Using Laser Navigation and mirror reflector for guidance positioning.
2. No need additional marking such as: RFID card, magnetic nail, QR code, etc.
3. Flexible routes, fit to variety field environment, modify route through PC software (PMS).
4. Easy maintenance.

Advantages:

1. Stacking process in loading and unloading material
2. No need to change broken magnetic tape, missing RFID; QR code; magnetic nail.
3. High positioning accuracy.
4. Perform many tasks in one time.
5. High capacity

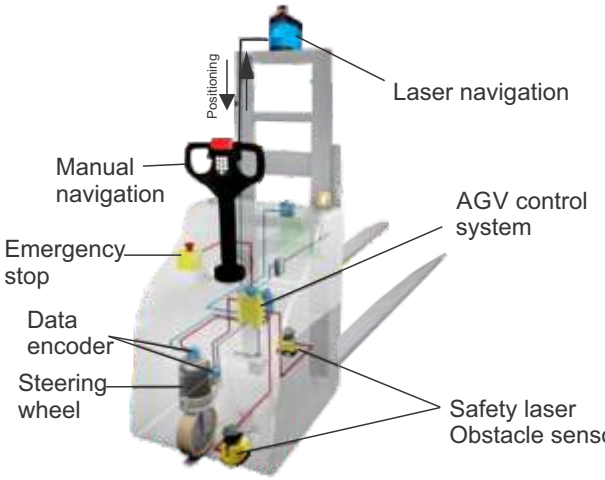

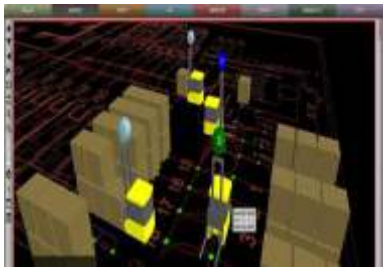

Project Management System (PMS)

vc cv	Conventional Forklift	Laser Guidance Forklift AGV
Size	Customize	Customize
Capacity	Customize	Customize
Driving Mode	Licensed human driver	Unmanned
Human Factory	Emotion, Fatique, Unpatient	Intelligent automatic multi-control
Working Time	8 Hours	8 Hours
Working Environment	Safety environment only	Various of environment
Charging Process	Manual	Auto
Cost	Driver salary + Forkift	Automation control system + Forklift

Casun-View System

- **Real time monitoring system**
- **Monitoring AGV control system**
- **Monitoring Dispatch system**
- **Historical record for AGV record** : Display AGV HMI condition , battery level , AGV speed , error problem, etc
- **AGV position mapping :** Display AGV position

AMS : AGV Management System

- **AGV control system** : **Control every single AGV condition**
- **Order system** : **Order request or manual task arranging order request.**
- **Sending task** : **Requested task send to each AGV**
- **Traffic control** : **Controlling the traffic, avoiding collision between AGV**

PMS : Project Management system

- **Dispatch system** (sending AGV to specific location)
- **Connect with others system : connect with customer system such as WMS or other logistic software**
- **Display every orders that has been delivery, on progress, and in queue condition.**

CLARK AGV

CLRK900 - P1W

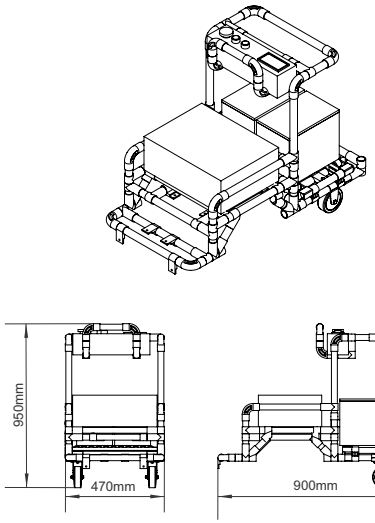

Dimensions	Customize
Frame	i-Lite® Pipes and Joints
Support Wheels	Caster Wheels Fixed 2 Pcs
Drive Wheels	Polyurethane Wheels 2 Pcs
Load Capacity	up to 80 kg
Driving Direction	Forward, Left & right
Guide Methode	Magnetic tape North Pole, H 1.2mm W 50mm
Display Setting	HMI 4.3 Inch
Running Speed	0-30 m/min (adjustable)
Climbing Capacity	5 degree
Safety	Obstacle sensor
Obstacle Sensor	Panasonic
Alarm Mode	Sound and light
Battery	Lithium 24V 30Ah
Charge mode	Manual Charging

Omni CLARK AGV

CLRK107 - OW15

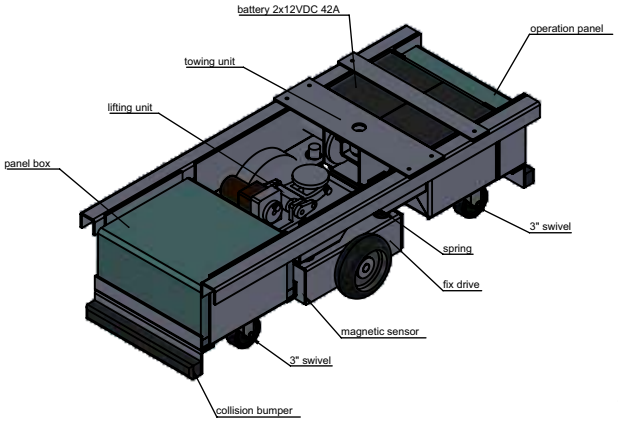

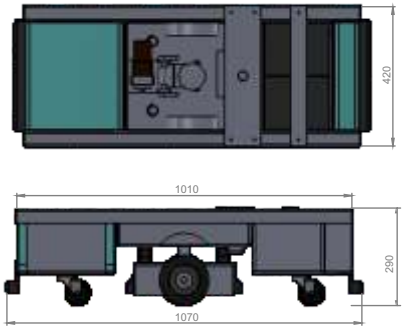

Dimensions	1070mm x 420mm x 290 mm
Frame	Steel 5mm
Support Wheels	4pcs swivel wheel
Drive Wheels	Polyurethane Wheels 2 Pcs
Load Capacity	up to 150kg
Driving Direction	orward, reverse, left, right, rotate
Guide Methode	Magnetic tape North Pole, H 1.2mm W 50mm
Display Setting	LCD monochrome
Running Speed	0-30 m/min (adjustable)
Climbing Capacity	5 degree
Safety	Obstacle sensor
Obstacle Sensor	Panasonic
Alarm Mode	Sound and light
Battery	Lithium 2x 12V 42Ah
Charge mode	Manual Charging

Auto Charging

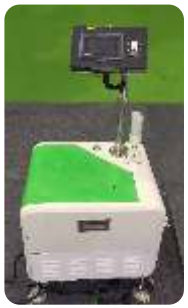

When its energy is lower than a preset value at working, the AGV will move to the charging station and communicate with this charging device. After the connection establishment, the charge electrodes will dock with the AGV automatically to achieve automatic charging. The electrodes will separate with the AGV automatically when it finishes the charging then the AGV moves back to the working area for material delivering.

Andon Charging

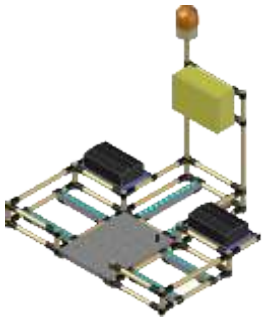

Andon Charging System will notify the user that the AGV battery needs to be charged. Using light and sound alarm triggered by the AGV , Andon Charging will inform the user to manually charge the battery.

Induction Charging

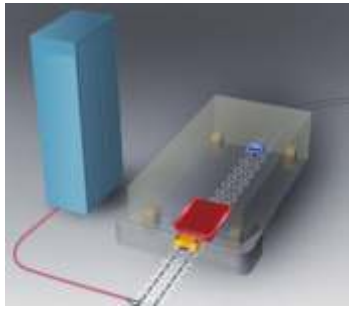

Induction Charging supplies AGV with electric current. Electric current is transferred inductively from a stationary [primary] conductor to Line AGV. Does not generate noise or contact brush residue as current transfer does not require mechanical contact. No deployment limitations in difficult environmental conditions such as dust , water, ice, strong winds etc.

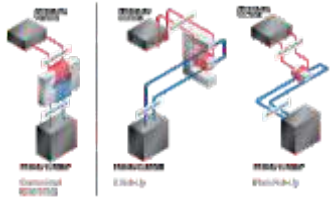

Safety System

The safety sensors have provided reliable protection to moving types of equipment of many industries, with an obvious advantage over traditional safety solutions (e.g. guard bar, safety mats and etc).

SICK Sensor

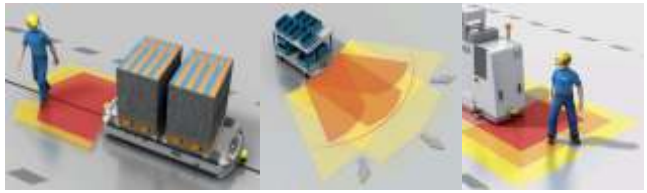

Panasonic Sensor

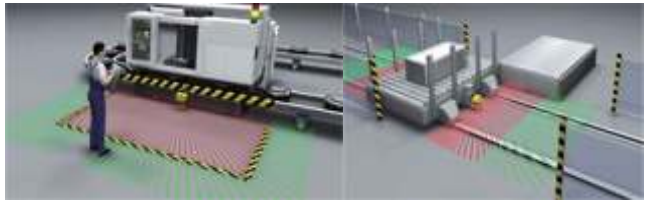

CASUN IR Sensor

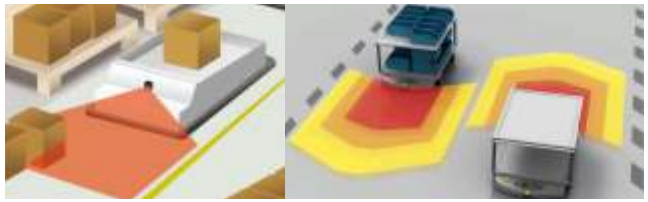

Traffic Control System

Traffic Control System is developed to avoid conflict between AVGs in a complex route such as a cross-section at the same time. The 1st AGV will control the others by sending a signal to other AGVs through Traffic Control. Thus, the 1st AGV will move first while the others wait till it leaves the controlled area. Then the 2nd AGV will take over the place of the 1st one, controlling the rest, moving and so on. This system works like traffic lights in everyday life, making complex production safer and easier.

Central Control System

Central Control System has multiple functions as follows:

1. Traffic Control Function, managing AGVS to avoid a collision at crosses and turning while working.
2. Real-Time and Dynamic display AGVs position, speed, station and battery status.
3. On-Line Remote control to call free AGV automatically, assign tasks and maximizing the utilization rate
4. Changing Route and station in real time, also available for ERP System

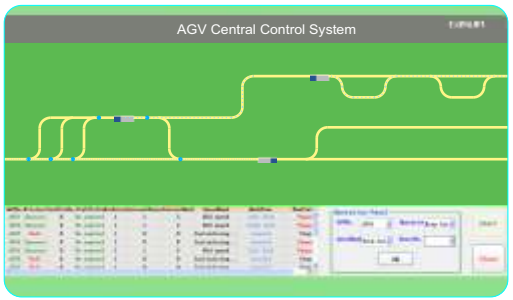

Call System

The Call System is an interface/device (button or Touch Screen). It is an original product develop by Casun Infiniti, used with AGV to achieve fully automated transportation of production. Designed for single kind of material, the “button box” type has a simple structure and small size, which is easy for installation and operation. The “touchscreen” type can call a variety of materials synchronously, sending information between call points and loading point rapidly and precisely. The operator can clearly and easily notice the information or lack of material through the pretty touchscreen

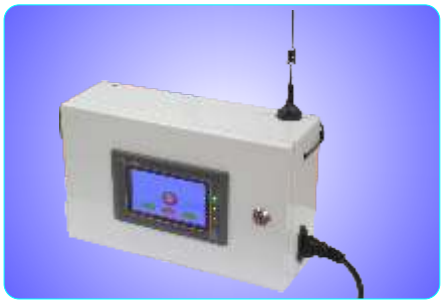

Dispatch System

Dispatching System used to simplify AGV path where the routes are complex that can be performed manually or automatically through Wireless communication. It can work independently or with The Call System, making the material delivering system easier and automated.

Automation

1 Auto Door & Lift

2 Auto Gate

3 Conveyor & Lifter

+ Lean Product =

+ Karakuri =

+ Automation =

+ Lifter =

Techman's TM5 Robot

The TM5 collaborative robot features simple programming, innovative integrated vision capabilities together with the latest safety functionality, all leading to rapid deployment in a huge variety of applications.
Having vision identification functionality completely integrated within the collaborative robot platform, provides an easy and intuitive way to achieve robot calibration to work piece or tooling, product selection, 1D or 2D barcodes and a host of other vision applications, delivering a true Industry 4.0 solution.

The world's first collaborative robot with built-in vision

Industrial 4.0 enabled

Highly flexible deployment and quick job change

Low automation and maintenance costs

Smart

Built-in vision system

TM Robot is equipped with a built-in vision system, which integrates into both the hardware and software perfectly, whereas traditional add-on vision solutions to robotics are complicated, time consuming and costly to implement.

Masters in robot vision

Many standard robot vision functions are already built into our system: pattern matching, object localisation, image enhancement, bar code reading, colour recognition, etc. All these functions have been integrated into our remarkably easy-to-use user interface.

5 Minutes to achieve a visual pick & place task

Combining our smart vision system and our hand-guiding functions, everyone, even those without robotic programming experience, can achieve a visual pick & place task within 5 minutes.

Simple

Revolutionary user interface

No more coding! You can implement your automation task with our revolutionary simple-to-use user interface, an all-graphic flow chart based HMI. Users, even those without coding experience with industrial robots, can learn to use TM robot easily and quickly. You can program every built-in vision function on the GUI. Furthermore, the traditional heavy umbilical wired pendant is gone. Our user interface can be operated on PCs, notebooks or tablets.

Use your hand

Another reason TM Robot is more simple to program than the other modern robots is our well designed hand-guiding functions with servo assist. You can lock selected axes to allow adjustment in defined planes and then fine tune the co-ordinates with easy editing of those co-ordinates within the programming package.

Easy to deploy

Because TM robot is so simple to program, it is very easily deployed into different applications, reducing your time-to-production and saving your total cost in automation.

Safe

Force limiting

TM Robot complies with the ISO 10218-1 & ISO/TS 15066 human-robot co-operation safety requirements for collaborative robots, allowing the robot to be programmed with both speed and force limits.

Safety is our priority

TM Robot is serious about safety in every aspect of the design of the whole robot system, through hardware, software and operational design.

Ergonomic design

TM Robots are physically designed to be safe to their surroundings, soft end caps and no sharp edges are all part of the collaborative experience.

CE ISO 10218-1 ISO 15066

TM5 Collaborative Robot vs. Traditional Robot

The TM5 Collaborative Robot allows human-machine cooperation in the production line, greatly improving production efficiency and reducing implementation costs. The TM5's high flexibility allows fast line and product changes, greatly reducing the overall cost of industrial automation. When adding Ethernet and EtherCAT connectivity the TM5 is the best collaborative robot for Industry 4.0 intelligent factory automation delivery.

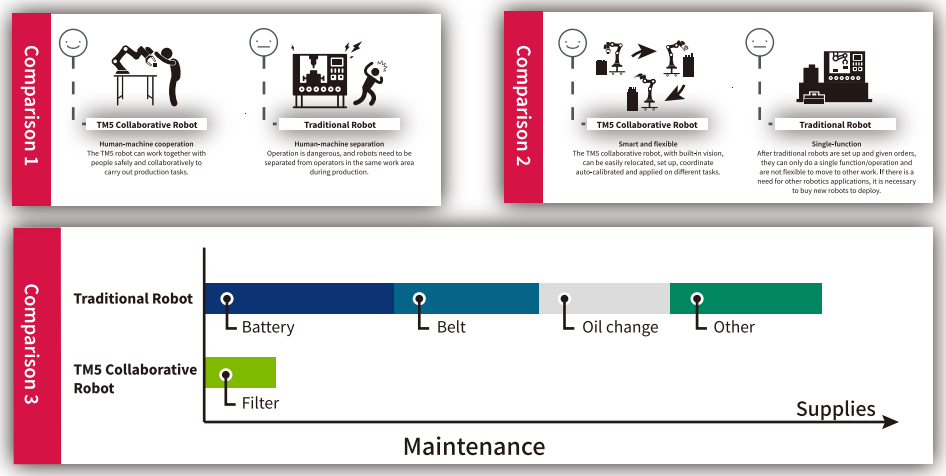

For reference only

TM5 Robot Applications

Because of the TM5 Collaborative Robot's simple, easy and safe capabilities, it can be used in a huge variety of industries such as electronics, metal processing, machinery, textiles, food, automobile, logistics etc. Built-in vision can be used intuitively in item identification for pick and place, position identification for assembly tasks, and even extended to coordinate set-up, flaw inspection, barcode scanning, product function testing and more. TM5 significantly enhances your automation and improves your productivity.

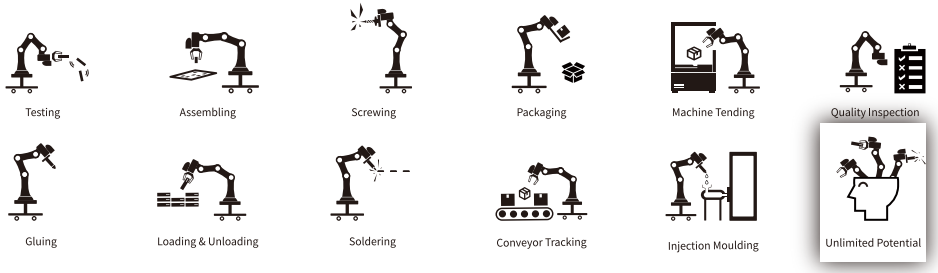

TMflow®

TMflow®is an all-graphical, flowchart-based robot programming user interface. Users even those without coding experience with industrial robots, can learn to use TM Robot quickly and easily.

All graphic user friendly interface.

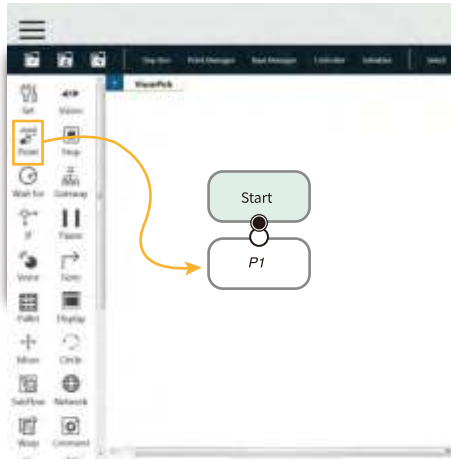

TM5 Vision System

Find

- Shape-based Pattern Matching
- Image-based Pattern Matching
- Fiducial-mark Matching
- Blob Finder

Enhance

- Contrast Enhancement
- Smoothing
- Thresholding
- Morphology
- Color Plane Extraction

Identify - Barcode / QR code support 1-Dbarcode、QR code & 2-D DataMatrix's decode

- Barcode / QR code
- Colour Detection

6 Axis Arm Robot

IFY-6AAR20-1580

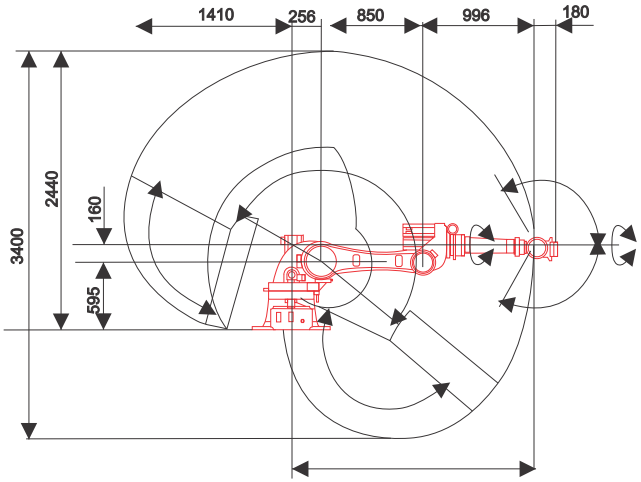

Working Diameter	R1580mm
Max Capacity	20Kg
Working Accuracy	±0.05mm
Weight	240Kg
Max Speed	450 /S°
Max Operation Area	±360°
Working Temperature	0~45 C
Assembling Method	Ground Assemble

About i-Picking

Picking is a Put-to-Light (PTL)systems which use light displays to direct operators to specific stock locations. Each product location can have an individual numeric or alphanumeric display with a light, an acknowledgment button, and a digital readout for indicating quantity. Other configurations allow fewer or more simplified displays to reduce the total cost and time.

What application problems can i-Picking solve?

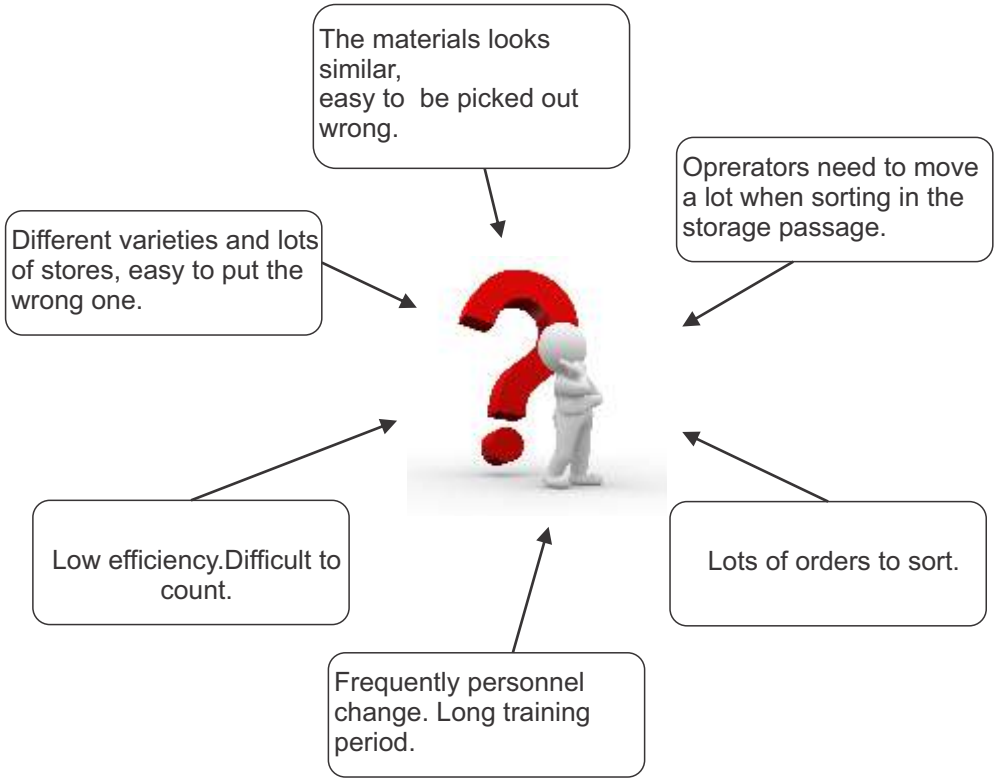

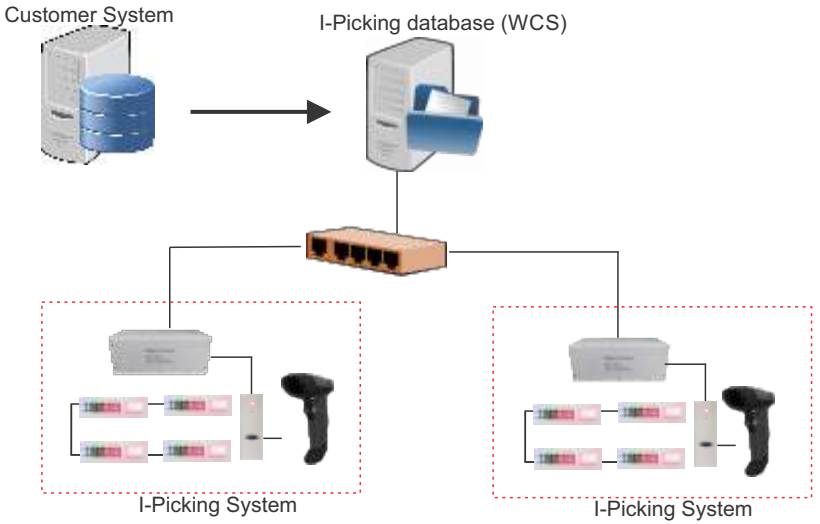

System's Major Principle

① Binding Relationship：Binding the goods allocation to the tags' ID in the system.

② Touch and lighting ：According to the storage location and amount in the orders, the system translates them into corresponding tags ID and display numbers.

③ Lighting and sorting：Accoring to the lighting position on the roadway light and the display number, operators put in or take out the material from the goods allocation.

⑤ Turn out the tags ：Accoding to the display number on the tags, operators take out or put in specified quantity of goods.

Digital Pick System (DPS)

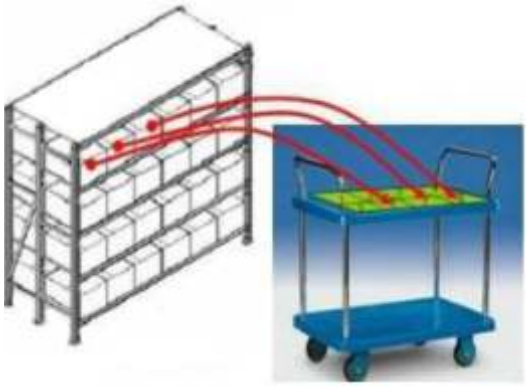

【1】For a single order or collecting orders.
【2】The system starts by lighting up the roadway light, then lights up the icking allocations and displays picking amounts.
【3】Accoring to the lighting position on the roadway light and tags display, operators pick out appointed material from the goods allocation.
【4】When finish picking the orders, the roadway light turns out and the finalizer alarms(or the last tag displays "END")

Digital Assorted System (DAS)

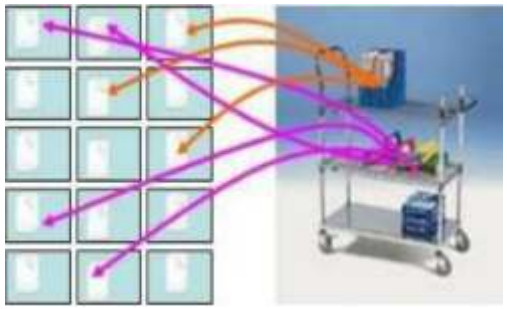

【1】For a single order or collecting orders' merchandise.
【2】Scanning the codes of the appointed goods, the binding tags on the allocations will light up.
【3】According to the lighting tags' direction and display amounts, operators put the goods into the container.
【4】When finish sowing the orders, the tags display "END", or continue sowing next range of goods.

IRY21-1350	Display : 5 digital 7-segment display two colors Voltage / Current : DC12V / 80mA (Avg.) Dimensions : L148mm x W46mm x H16mm
IRY21-1351	Display : 5 digital 7-segment display Voltage / Current : DC12V / 80mA (Avg.) Dimensions : L148mm x W46mm x H16mm
IRY5B-110	Touch-Bar PTL Voltage / Current : DC12V / 200mA (Avg.) Dimensions : W90mm x H95mm x D31mm
IRY30-COM1	RS232-CAN conversion function Voltage / Current : DC 5 - 12V / 30mA (max) Dimensions : L158mm x W46mm x H16mm
IRYPA-C131	The Standard mode : Connected to 128 tags. Network Operations : TCP/IP server,UDP,client Input voltage : AC 220V, 130W (Avg.), 300W (Max.) Size : L282mm x W148mm x H120mm
IRYPA-C253	The Standard mode : Connected to 256 tags. Network Operations : TCP/IP server,UDP,client Input voltage : AC 220V, 130W (Avg.), 600W (Max.) Size : L400mm x W300mm x H200mm